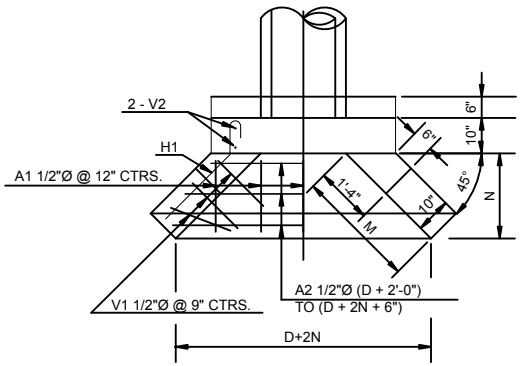

PLAN

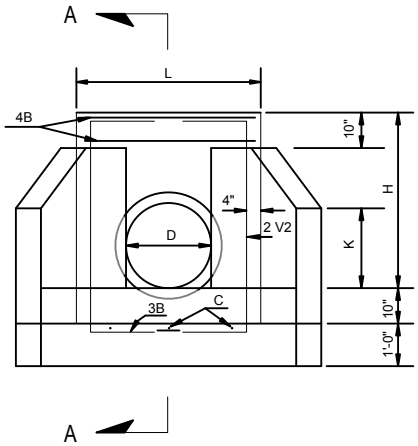

ELEVATION

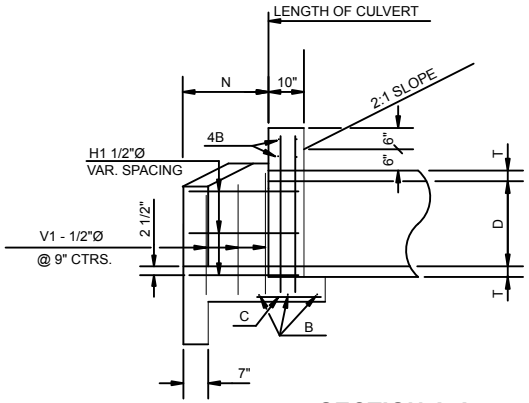

SECTION A-A

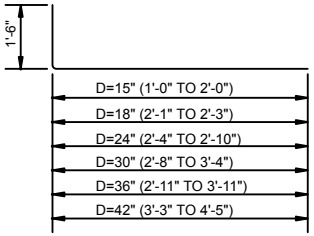

BENDING FOR V1 - BARS

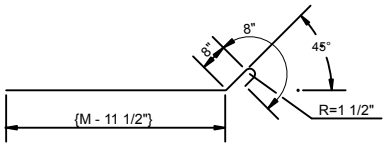

BENDING FOR H1 - BARS

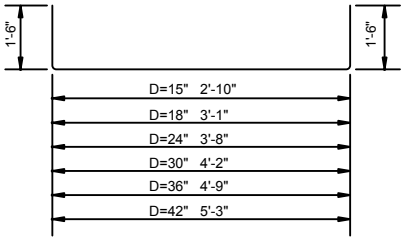

BENDING FOR V2 - BARS

DIMENSIONS & QUANTITIES FOR HEADWALLS WITH 45° WINGS

DIMENSIONS								REINFORCING STEEL														QUANTITIES *	
D	AREA SQ. FT.	T	H	K	L	M	N	A1 - 1/2"Ø		A2 - 1/2"Ø		B - 1/2"Ø		C - 1/2"Ø		H1 - 1/2"Ø		V1 - 1/2"Ø		V2 - 1/2"Ø		CLASS "A" CONC., C.Y.	REINF. STEEL, LBS.
								NO.	LGTH.	NO.	LGTH.	NO.	LGTH.	NO.	LGTH.	NO.	LGTH.	NO.	LGTH.	NO.	LGTH.		
15"	1.23	2 1/4"	2'-5 1/4"	1'-5"	3'-7"	1'-9"	1'-3"	4	1'-0"	2	3'-9" AV.	7	3'-3"	3	1'-6"	4	2'-1"	4	3'-5" AV.	4	5'-10"	0.74	57
18"	1.77	2 1/2"	2'-8 1/2"	1'-7"	3'-10"	2'-1 1/2"	1'-6"	4	1'-2"	2	4'-3" AV.	7	3'-6"	3	1'-6"	4	2'-6"	4	3'-8" AV.	4	6'-1"	0.91	61
24"	3.14	3"	3'-3"	1'-10 1/2"	4'-4"	2'-10"	2'-0"	5	1'-8"	3	5'-3" AV.	7	4'-0"	3	1'-6"	6	3'-2"	6	4'-1" AV.	4	6'-8"	1.31	85
30"	4.91	3 1/2"	3'-9 1/2"	2'-2"	4'-10"	3'-6 1/2"	2'-6"	5	2'-2"	3	6'-3" AV.	7	4'-6"	4	1'-6"	6	3'-11"	8	4'-6" AV.	4	7'-2"	1.77	104
36"	7.07	4"	4'-4"	2'-5 1/2"	5'-4"	4'-3"	3'-0"	6	2'-8"	4	7'-3" AV.	7	5'-0"	4	1'-6"	6	4'-7"	10	4'-11" AV.	4	7'-9"	2.29	130
42"	9.62	4 1/2"	4'-10 1/2"	2'-9"	5'-10"	4'-11 1/2"	3'-6"	6	3'-2"	4	8'-3" AV.	7	5'-6"	4	1'-6"	6	5'-4"	12	5'-4" AV.	4	8'-3"	2.89	151

* FOR ONE HEADWALL

ALL EXPOSED CONCRETE EDGES SHALL HAVE A 3/4" CHAMFER

STANDARD CONCRETE HEADWALLS

FOR

15" TO 42" PIPE

REVISION	BY	DATE

STORM SEWER HEADWALL SHEET 1

STANDARD DETAILS

CITY OF OWASSO, OKLAHOMA

PUBLIC WORKS DEPARTMENT

ENGINEERING DIVISION

DATE: 05/05

STANDARD NO. STRM-12

:\STANDARD DETAILS\STORM\STRM-12