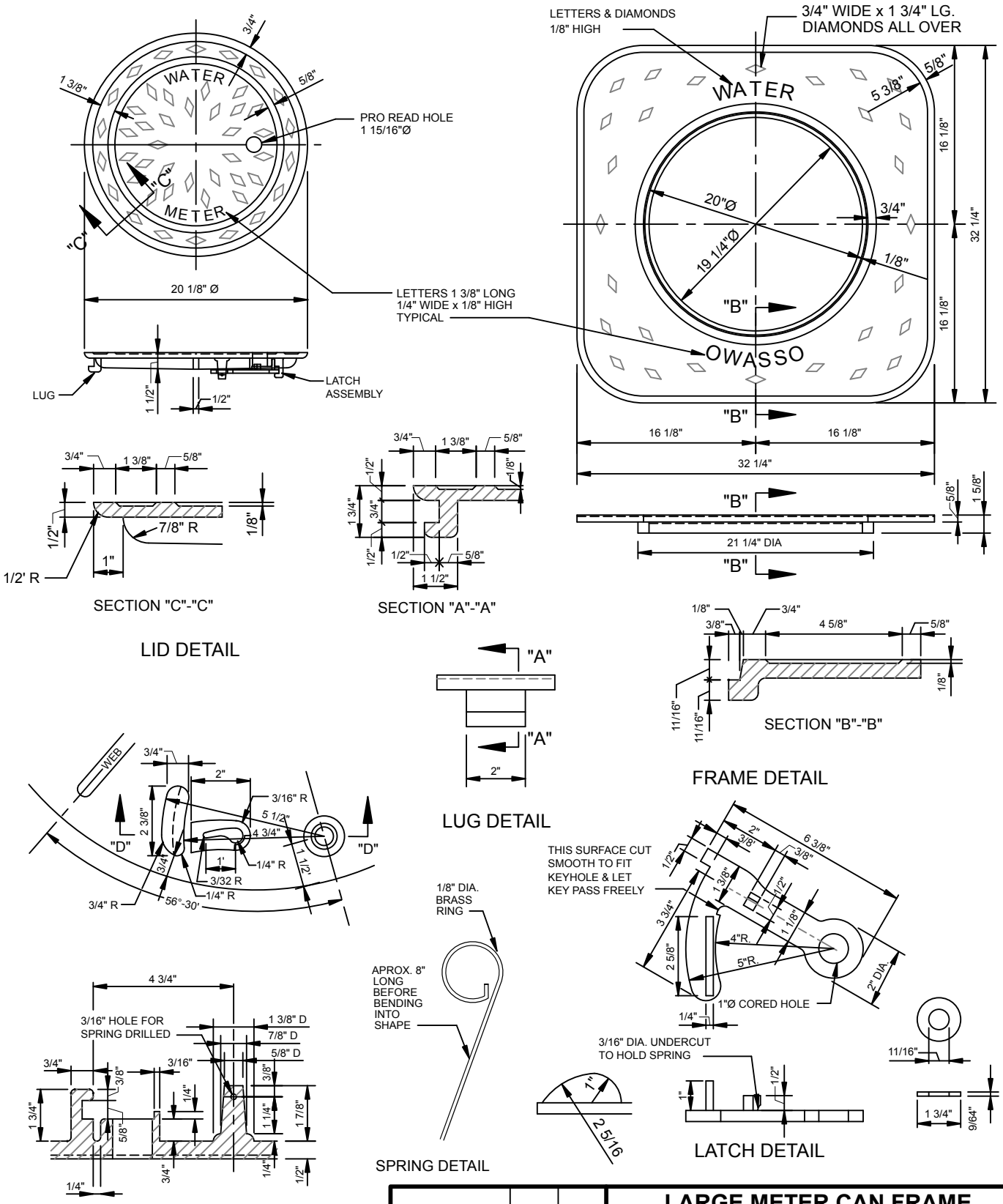

NOTE:
NOT FOR USE IN ROADWAYS.

REVISION	BY	DATE

LARGE METER CAN FRAME AND LID DETAIL
STANDARD DETAILS

CITY OF OWASSO, OKLAHOMA

PUBLIC WORKS DEPARTMENT
ENGINEERING DIVISION

DATE: 05/05 STANDARD NO. WAT-10

:\STANDARD DETAILS\WATER\WAT-10